Commodore®

C64GS
TECH DATA

NOVEMBER, 1990 **PN-400401-01**

SPECIFICATIONS

FEATURES

MICROPROCESSOR:	6510A, 1MHz clock — Compatible with 6502
MEMORY:	64K
ROM:	20K ROM standard includes operating system
DISPLAY:	40 columns x 25 lines of text
COLOURS:	16 background, border and characters
DISPLAY MODE:	Text characters — High resolution graphics
RESOLUTION:	320 x 200 pixels
SPRITES:	8 independent sprites, each consists of 24 x 21 pixels and up to 4 colours, each independently expandable horizontally and vertically
SOUND:	6581 Sound Interface Device includes 3 independent tone generators
PORTS:	ROM cartridge port, 2 joystick ports

SYSTEM INTERFACES

SIDE PANEL CONNECTIONS

POWER CONNECTOR:	Uses standard C64 power supply
POWER SWITCH:	Supplies power to the system
JOYSTICK PORTS:	Two standard DB9 connectors

TOP CONNECTIONS

CARTRIDGE SLOT:	The rectangular slot accepts program or game cartridges

REAR CONNECTIONS

MODULATOR SWITCH:	A switch is provided on the modulator to change the audio carrier between 6MHz (UK) and 5.5MHz (continental Europe).
RF OUTPUT:	Supplies both the picture and sound to a PAL television set.
AUDIO/VIDEO OUTPUT:	This is a C64 style 8 pin DIN connector for Luma Chroma Audio connections to a PAL monitor

POWER REQUIREMENTS

240V, 50Hz

Copyright © 1990 by Commodore Electronics Limited.
All rights reserved. Printed in U.S.A.

SHIPPING ASSEMBLY

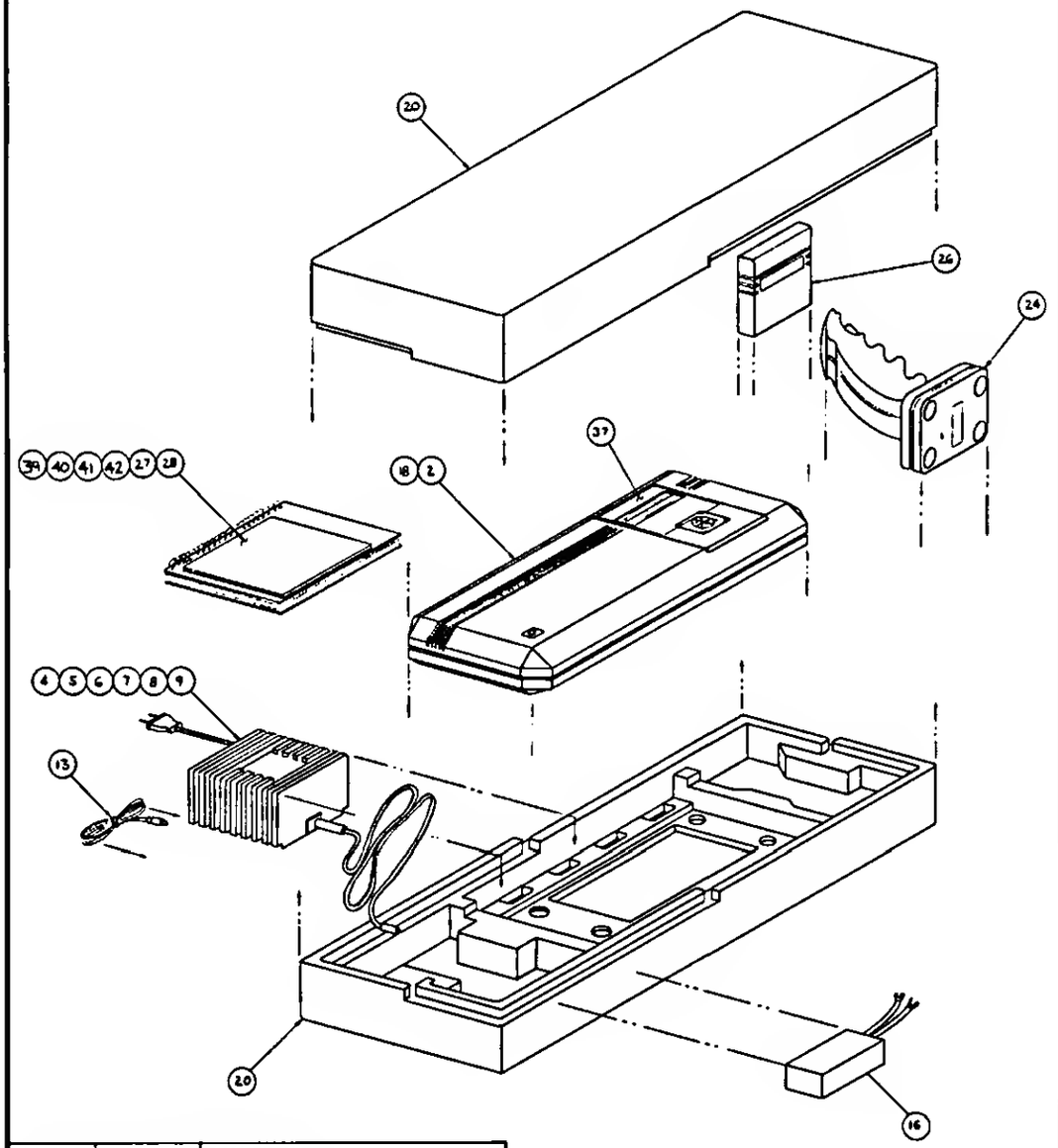

REF. NO.	PART NO.	PART NAME
1	363494-01	MAIN ASSY (NTSC)
2	363494-02	MAIN ASSY (PAL)
4	251053-07	POWER SUPPLY SEV
5	251053-09	POWER SUPPLY UL
6	251053-11	POWER SUPPLY VDE
7	251053-12	POWER SUPPLY BSI
8	251053-10	POWER SUPPLY UL/CSA
9	251053-13	POWER SUPPLY SEV SUB
	251053-15	POWER SUPPLY SAA
13	251846-01	CABLE, RF - PAL
16	325228-01	SWITCH, RF - SWEDEN
18	1540025-01	BAG, PLASTIC
19	324257-01	BAG, DRYING AGENT
20	363528-01	END CAP, FOAM
21	363529-01	SLEEVE, C64 CONSOLE
23	363530-01	BOX, MASTER SHIPPING (1/4)
24	363531-01	JOYSTICK
26	363535-01	CARTRIDGE
27	363536-01	MANUAL, C64GS SYSTEM GUIDE
28	363357-01	MANUAL, C64GS GAME GUIDE
29	366386-01	LABEL, RATING (W. GERMAN PROD)
30	366386-02	LABEL, RATING (W. GERMAN PROD)
31	366386-03	LABEL, RATING (HK PROD)
32	366386-04	LABEL, RATING (HK PROD)
33	366386-05	LABEL, RATING (CHINA PROD)
34	366386-06	LABEL, RATING (CHINA PROD)
36	325090-02	STICKER, SEAL
37	366427-01	LABEL, STATIC CLING

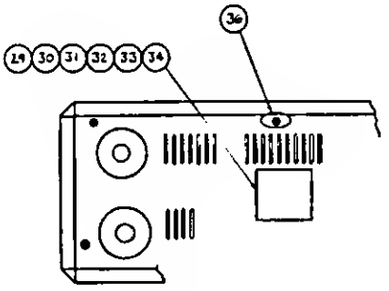

CPU BOTTOM

MAIN ASSEMBLY

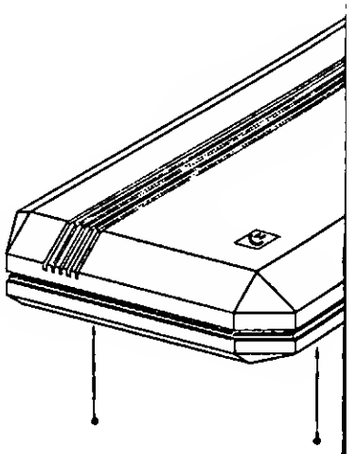

BOTTOM CASE ASSEMBLY

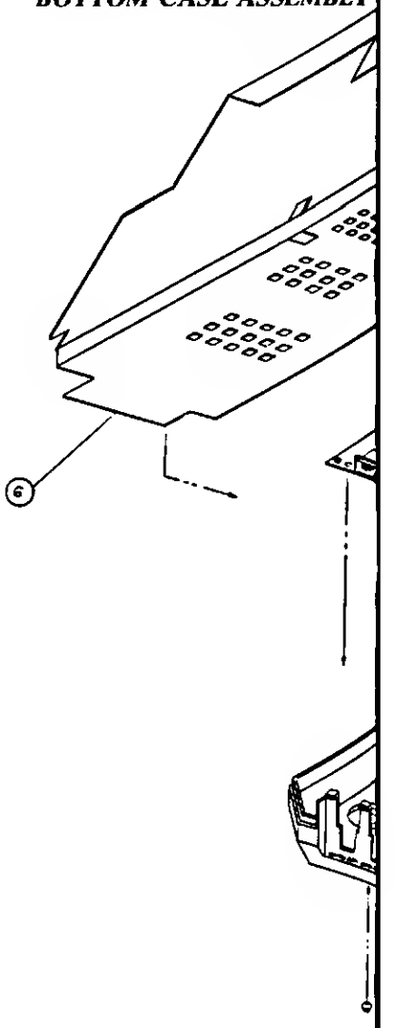

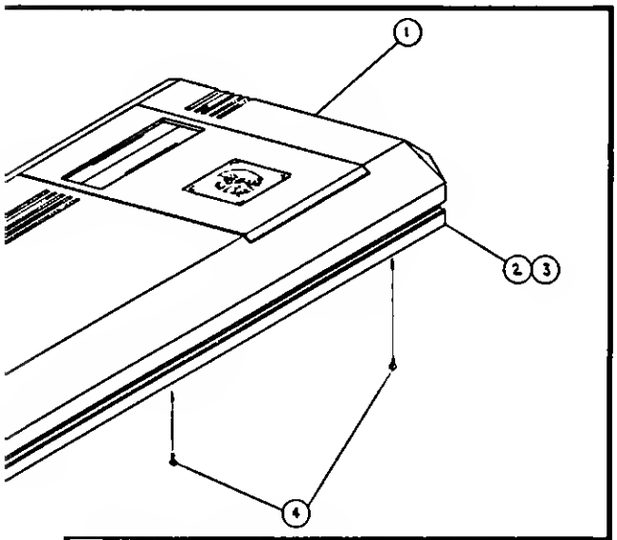

REF. NO.	PART NO.	PART NAME
1	363495-01	TOP CASE ASSY
2	313491-01	BOTTOM CASE ASSY NTSC
3	313491-02	BOTTOM CASE ASSY PAL
4	390177-02	SCREW, SELF TAP #5 TORX 3/8" QTY = 5

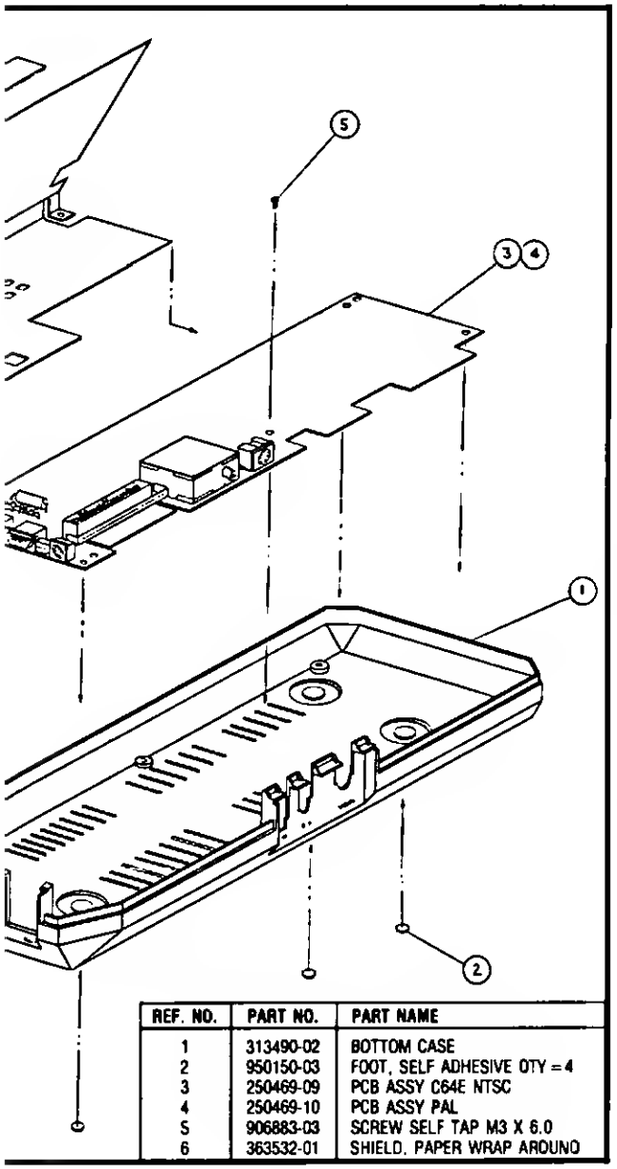

REF. NO.	PART NO.	PART NAME
1	313490-02	BOTTOM CASE
2	950150-03	FOOT, SELF ADHESIVE QTY = 4
3	250469-09	PCB ASSY C64E NTSC
4	250469-10	PCB ASSY PAL
5	906883-03	SCREW SELF TAP M3 X 6.0
6	363532-01	SHIELD, PAPER WRAP AROUND

TOP CASE ASSEMBLY

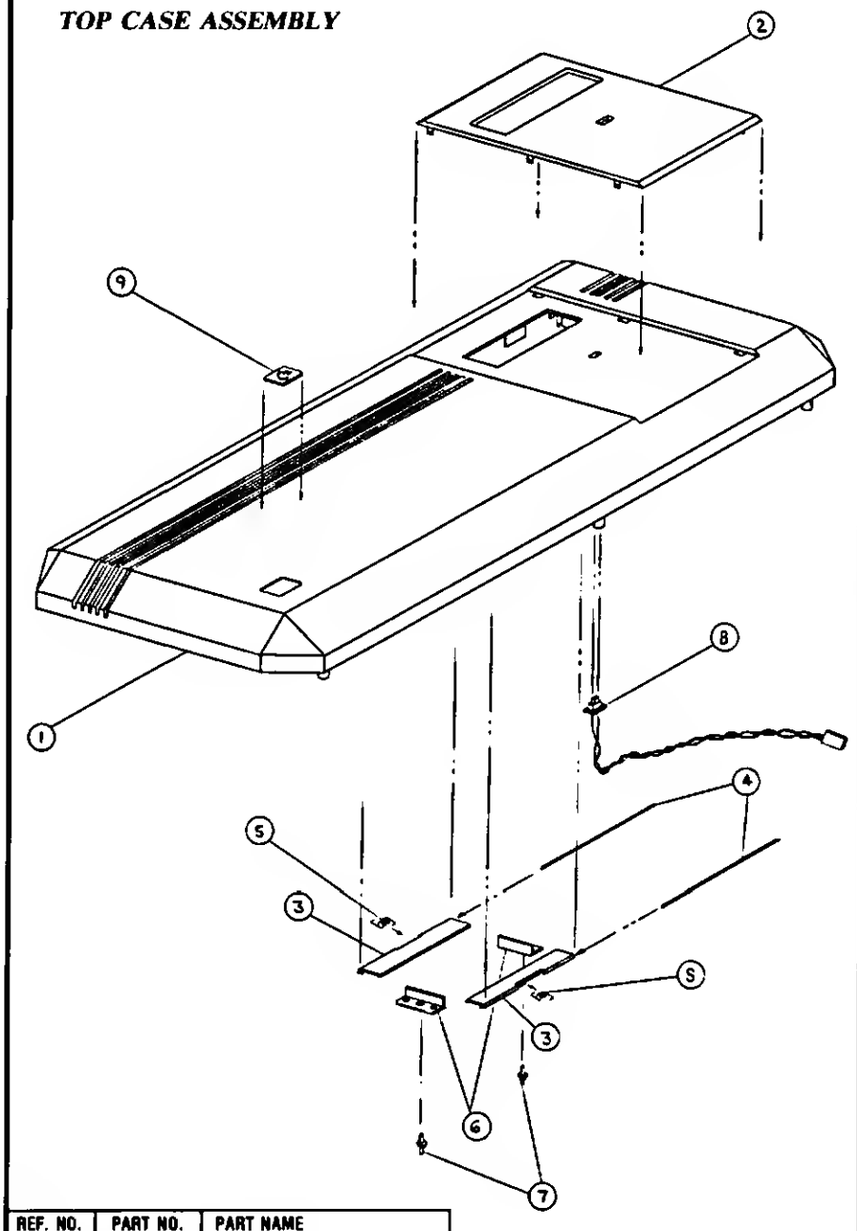

REF. NO.	PART NO.	PART NAME
1	313489-01	TOP CASE
2	313488-01	ACCENT PLATE
3	251191-01	DOOR
4	251194-01	DOOR SHAFT
5	251193-01	DOOR SPRING
6	390866-01	DOOR SHAFT BRACKET
7	363694-01	RIVET, PLASTIC
8	380016-02	LED, POWER ON L + 360MM
9	380133-06	LOGO

C64 GAME SYSTEM ASSEMBLY DIAGRAMS

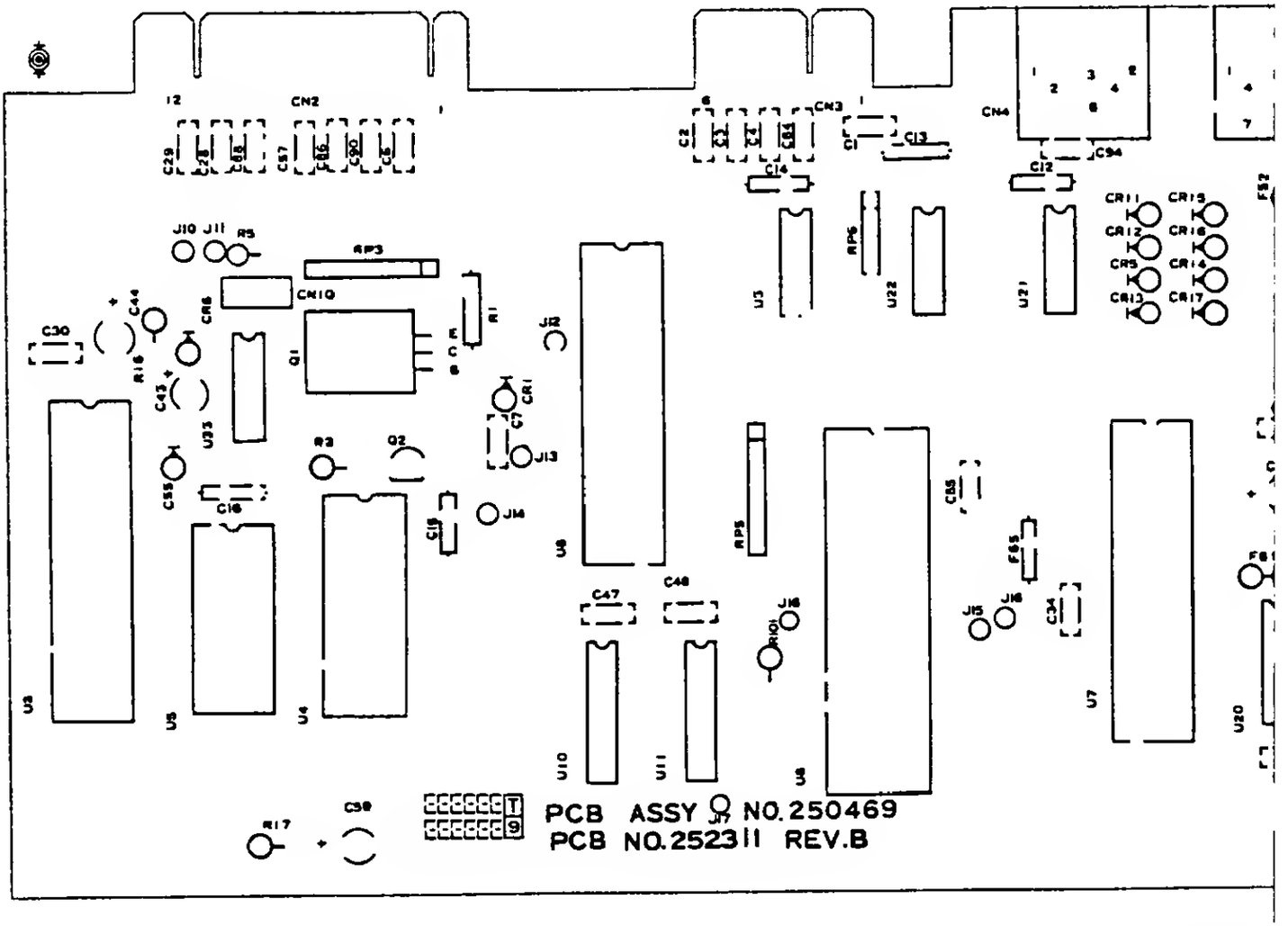

Commodore Internat
PCB Co
PCB Assembly #250

IC COMPONENTS		
318012-01	8500	U6
906108-01	6526	U1,U2
318027-01	8565	U7
318013-01	8580	U9
901225-01	2332 ROM CHAR	U5
901502-01	4066	U18,U21
901522-06	7406	U22
901521-03	74LS08	U3
901521-30	74LS14	U23
251527-08	8701T6	U20
251527-09	8701L6	SUB FOR 251527-08
901453-07	2114	U19 (USE W/U8 & REV A PCB)
390083-02	64K X 4 BIT DRAM, QTY 2	U10,U11
390083-01	64 K 4 BIT DRAM	SUB FOR 390083-02
901453-09	2114	U19
901522-14	7416	U22 SUB FOR IC 7406
390083-12	64K X 4 BIT DRAM	U10,U11 SUBSTITUTE
390083-05	64K X 4 BIT DRAM	U10, U11 SUBSTITUTE
390889-01	128K ROM (GAME) U.S. PAL	U4
251715-01	MEMORY CONTROLLER	U8 SUB USE W/REV A PCB
252535-01	MEMORY CONTROLLER	U8

RESIBTOR PACKS		
902441-22	1K 6PIN 5EL	RP6
902412-07	3.3K 9PIN 8EL	RP4
902442-29	3.3K 8PIN 7EL	RP3,RP5

RESISTORS 5% @ ¼ WATT, CARBON FILM, UNLESS OTHERWISE SPECIFIED		
251068-65	390 OHM	R5
251068-69	560 OHM	R16
251068-76	1K	R3,R12
251068-101	10K	R9,R17
251068-126	100K	R14
251068-51	100 OHM	R101
901500-14	10 OHM, ½ W, 5%	R19
251068-82	1.8K	R100

CAPACITORS		
251069-04	CER RAD 470 PF 50V	C2-4,6,76,90
251068-12	CER RAD 2000 PF 50V	C80,C81
251075-06	CER RAD 0.1 UF 25V	C1,7,28-30,34,35,37,39, 40,47,48,55,61,69,79,84
251304-71	CER RAD 22000 PF 50V	C70,C71
251079-06	ELEC 2.2 PF 50V	C44
900100-11	ELEC RAD 4.7 PF 25V	C59
900100-01	ELEC RAD 10 PF 25V	C77
900100-40	ELEC RAD 100 PF 16V	C58
900100-03	ELEC RAD 220 PF 25V	C65
900101-52	ELEC RAD 1000 PF 16V	C63
900100-33	ELEC RAD 47 PF 16V	C36
900100-18	ELEC RAD 220 PF 16V	C43
390101-07	ELEC RAD 470 PF 35V	C66
251074-09	ELEC RAD 22000 PF 25V	C70,C71 SUB FOR 251304-71
251029-02	TRIMMER 7.7-40 PF	CT-1
251075-01	CER RAD 0.01 UF	C56

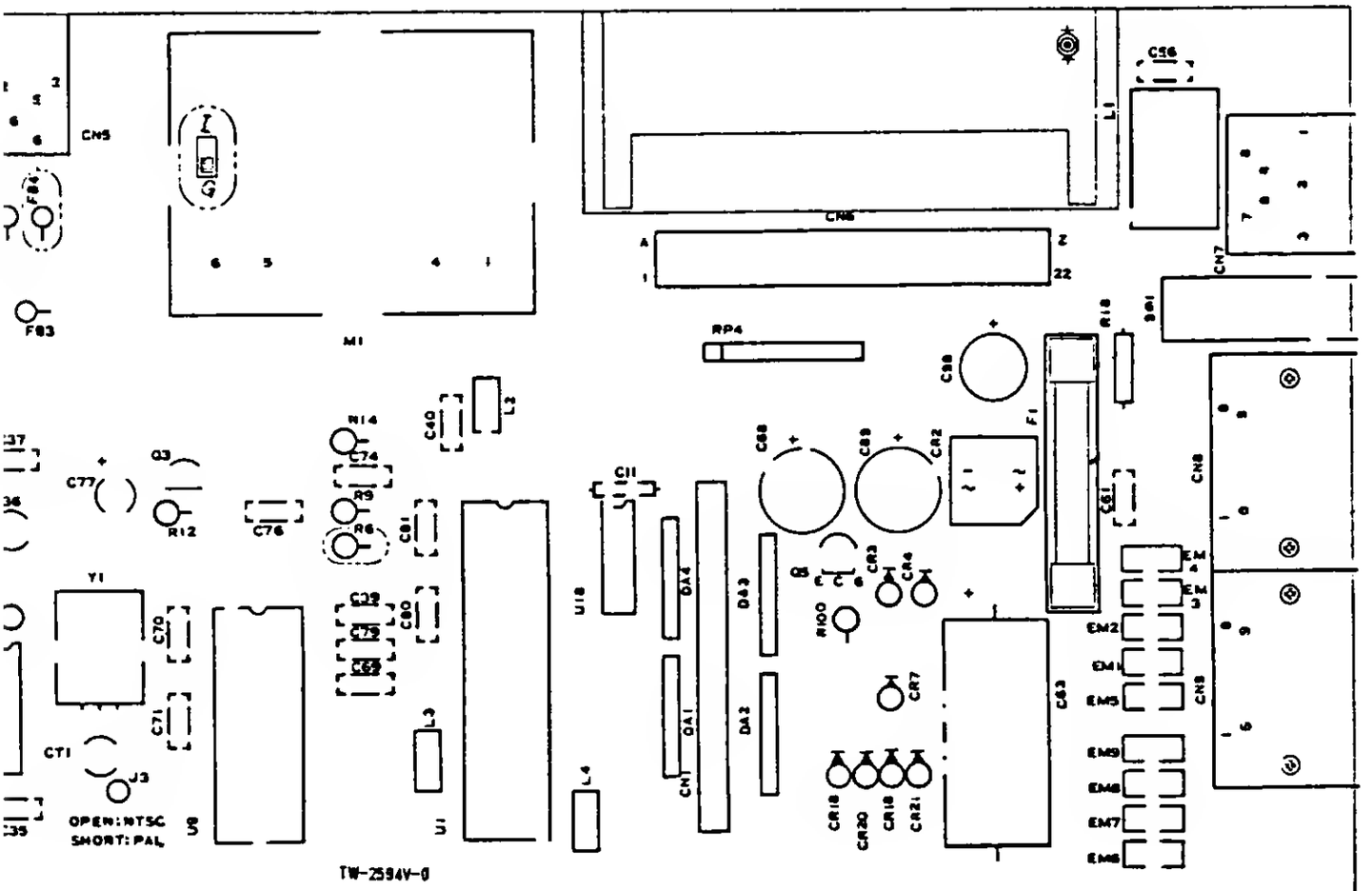

ional Spare Parts List

mponents

469-09, -10, REV. B

CONNECTORS		
251116-01	7 PIN - POWER	CN7
252168-01	8 PIN - AUDIO/VIDEO	CN5
251057-01	9 PIN MINI D - CONTROL PORTS	CN8, CN9
903332-03	HEADER ASSY 3 PIN	CN10
251251-01	44 PIN CARD EDGE - EXPANSION	CN6
MISCELLANEOUS		
903025-08	FERRITE BEAD LONG	FB7-FB10
252214-01	FERRITE BEAD 2 TURN	FB1
325563-01	FERRITE BEAD	FB2,3,4 (FB4 S/B COVERED W/ ASHRINK TUBE)
252341-01	RF CHOKE COIL	L3,4
251878-02	LINE FILTER 8 TERMINAL	L1
251878-01	LINE FILTER 8 TERMINAL	L1 SUB FOR 251878-02
251468-01	CRYSTAL 17.73447 MHZ	Y1 CL 18PF
200018-13	JUMPER WIRE	USE ON Y1
901151-17	COIL INDUCTOR 2.2	L2
900750-01	DIODE IN4001	CR3,4
251819-16	DIODE IN914 R	CR5,9,11-21
251819-01	DIODE IN4148 R	CR5,9,11-21 SUB FOR 251819-16
906103-04	DIODE ZENER RD30EB1	CR6
906103-05	DIODE ZENER RD3.0EB2	SUB FOR 906103-04
252313-63	DIODE ZENER RD10ESB2	CR7 FOR 8580 (HMOS SID)
252337-61	DIODE ZENER HZ11A1	Vz = 9.48-9.90 AT 5mA SUB FOR 252313-63

MISCELLANEOUS *(Continued)*		
252026-01	DIODE BRIDGE RECT S2VB10	CR2
251026-02	DIODE BRIDGE RECT DBA20B	SUB FOR 251026-01
251026-03	DIODE BRIDGE RECT DBA20C	SUB FOR 251026-01
251842-01	EMI FILTER 270PF	EMI1-9 DST310-55Y55271M
390257-03	EMI FILTER 270PF	EMI1-9 SUB DSS310-55Y5S271M
902694-01	TRANSISTOR 2SC1815	Q2,Q3
902671-01	TRANSISTOR 2SC945	Q2,Q3 SUB
251526-01	TRANSISTOR 2SC2458	Q2,Q3 SUB
252338-01	TRANSISTOR NPN 900mW	Q5
252405-03	MODULATOR - PAL	M1
904150-02	SOCKET 16 PIN (USE ON U20)	
904150-05	SOCKET 28 PIN (USE ON U4,U9)	
904150-06	SOCKET 40 PIN (USE ON U7)	
903556-18	FUSE, NORMAL BLO 250V 1.5A	F1
906102-02	FUSE, CLIP (USE ON F1)	
906102-01	FUSE CLIP	SUB FOR 906102-01
904500-01	SWITCH, ROCKER DPDT	SW1
363531-01	CARTRIDGE GUIDE - CONSOLE	
906883-03	SCREW SELF TAP M3 X 6 (FOR 9PIN DSUB)	
332299-01	INSULATION TAPES	

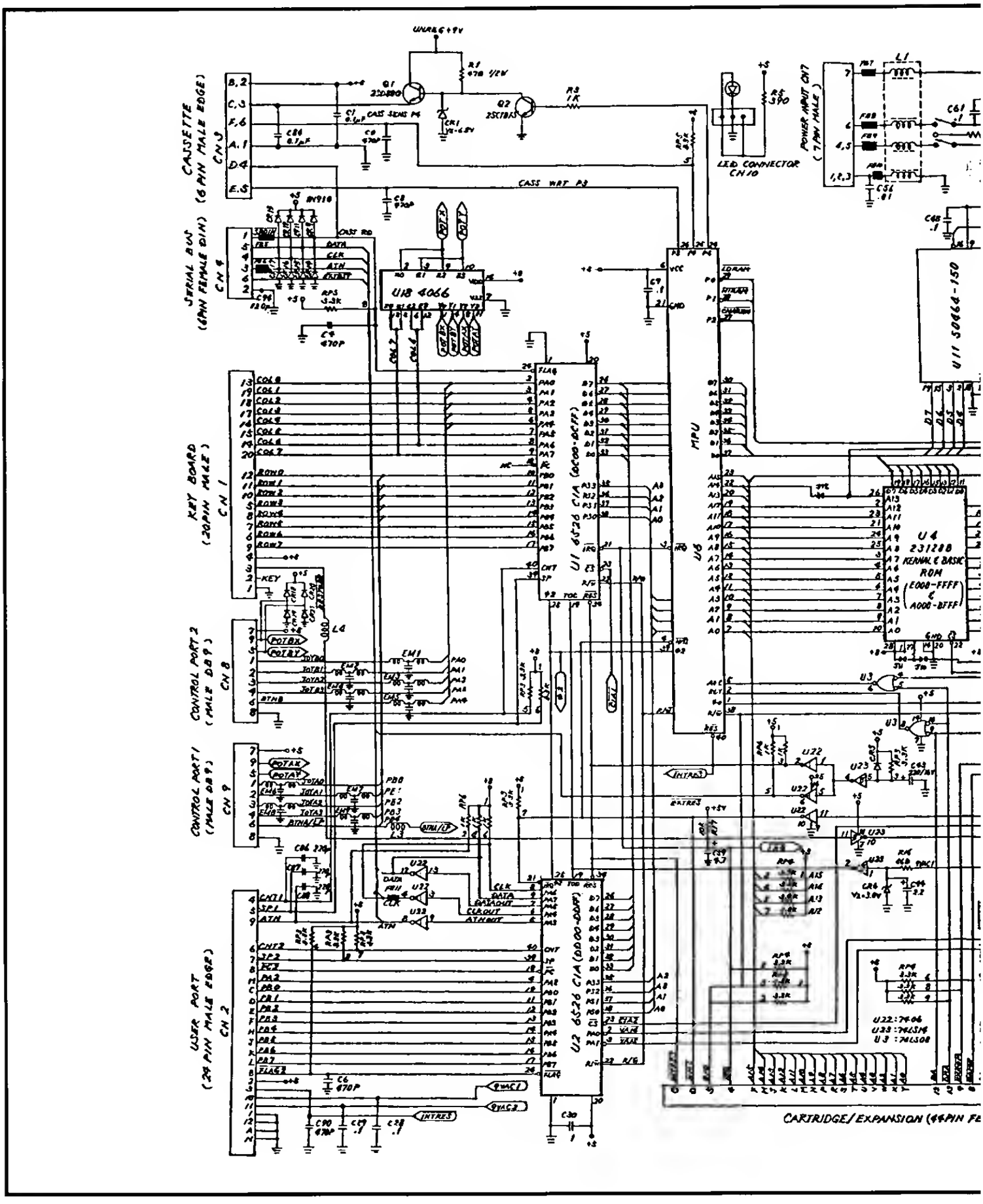
CASSETTE (6 PIN MALE EDGE) CN 3
SERIAL BUS (6PIN FEMALE DIN) CN 4
KEY BOARD (20PIN MALE) CN 1
CONTROL PORT 2 (MALE DB9) CN 8
CONTROL PORT 1 (MALE DB9) CN 9
USER PORT (24 PIN MALE EDGE) CN 2
U18 4066
U1 6526 C1A (DC00-DCFF)
U2 6526 C1A (DD00-DDFF)
U6 MPU
U4 23128 KERNAL & BASIC ROM (E000-FFFF & A000-BFFF)
U11 50464-150
LED CONNECTOR CN10
POWER INPUT CN7 (7 PIN MALE)
CASS WRT P3
CARTRIDGE/EXPANSION (44PIN FE

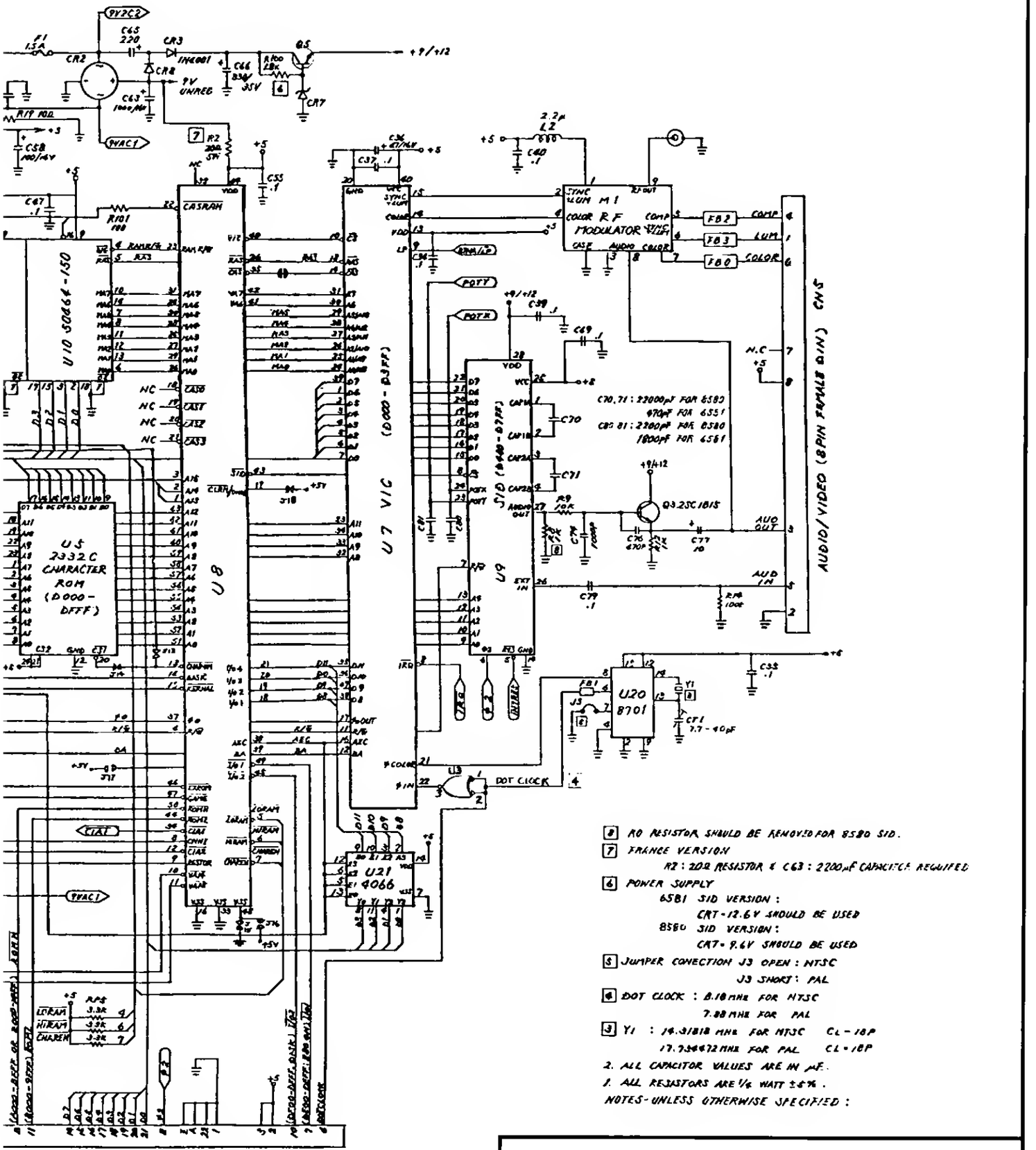

EMALE.) CN6

Schematic #252312, Rev. B

Sheet 1 of 1

CARTRIDGE EXPANSION SLOT CN6

PIN	TYPE	PIN	TYPE
1	GND	A	GND
2	+5V	B	$\overline{\text{ROMH}}$
3	+5V	C	$\overline{\text{RESET}}$
4	$\overline{\text{IRQ}}$	D	$\overline{\text{NMI}}$
5	R/$\overline{\text{W}}$	E	S 02
6	Dot Clock	F	A15
7	I/D 1	H	A14
8	$\overline{\text{GAME}}$	J	A13
9	$\overline{\text{EXROM}}$	K	A12
10	I/O 2	L	A11
11	$\overline{\text{ROML}}$	M	A10
12	BA	N	A9
13	$\overline{\text{DMA}}$	P	A8
14	D7	R	A7
15	D6	S	A6
16	D5	T	A5
17	D4	U	A4
18	D3	V	A3
19	D2	W	A2
20	D1	X	A1
21	D0	Y	A0
22	GND	Z	GND

JOYSTICK CN8, CN9

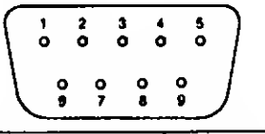

PIN	PORT 1 TYPE	PORT 2 TYPE
1	JOYA0	JDYB0
2	JDYA1	JDYB1
3	JOYA2	JOYB2
4	JOYA3	JOYB3
5	POT AY	POT BY
6	BUTTON A/LP	BUTTDN B
7	+5V (Max 50MA)	+5V
8	GND	GND
9	POT AX	POT BX

AUDIO/VIDEO CN5

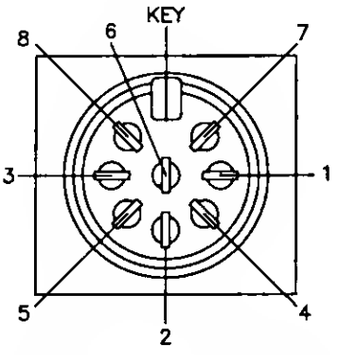

PIN	TYPE	PIN	TYPE
1	LUM	5	AUD/IN
2	GND	6	COLDR
3	AUD/OUT	7	NC
4	COMPOSITE	8	+5

POWER CN7

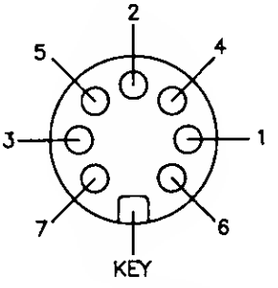

PIN	TYPE	PIN	TYPE
1	NC	5	+5 VDC
2	GND	6	9VAC
3	NC	7	9 VAC
4	NC		

TROUBLESHOOTING GUIDE C64 GAMES SYSTEM (C64 E PCB)

SYMPTOM	*POSSIBLE SOLUTION*
Abnormal colors appear in text	Check U19 (2114 RAM); U21 (4066); U7 (VIC)
Wrong characters are displayed	Check RAM (U10,U11)
System does not reset	Check U20 (556 1C)
White band scrolls down the screen (60/50 Hz Hum)	Check External Power Supply; VR2 (5V regulator)
Wavy screen after system warms up	Check External Power Supply — U20, U7
Black band scrolls through screen when system warms up	Check External Power Supply; CR2, C65, C66
Blank screen on power up	Check External Power Supply; U4 (Kernal/Basic ROM); U8 (MMU); U6 (MPU); U7 (VIC); U22, U23; U10, U11 (RAM); C22
System powers up with all characters displayed as blocks	Check U8 (MMU); U7 (VIC)
Intermittent display	Check Connectors — C63, C66
Joystick does not operate correctly	Check U1 (CIA); U18 (4066); EMI 1-9
Wrong frequency	Check C70, C41
No text is displayed	Check U4, U5 (ROMS); U2 (CIA); U7 (VIC)
Graphic characters displayed instead of text displayed	Check U7 (VIC); U2 (CIA); U8 (MMU)
No Sound	Check U19 (SID); F1 (Blown fuse)